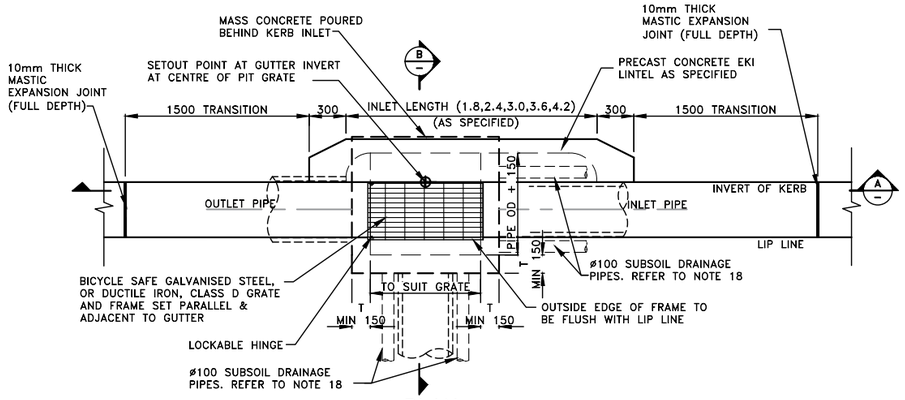


## PLAN
NOT TO SCALE

| PIT SPECIFICATIONS | | | | |
|---|---|---|---|---|
| DEPTH TO INVERT (D) (mm) | WALL THICKNESS (T) (mm) | BASE THICKNESS (B) (mm) | REINFORCMENT MESH | CORNER BARS |
| 0–1200 | 150 | 150 | SL82 | N12–300 L500 |
| 1200–2100 | 200 | 180 | SL81 | N12–200 L600 |
| >2100 | TO STRUCTURAL ENGINEERS SPECIFICAITONS | | | |

| PIT SPECIFICATIONS | |
|---|---|
| INLET LEGNTH EKI (mm) | MINIMUM HEIGHT TO LINTEL OBVERT (A) (mm) |
| 1800 | 250 |
| 2400 | 300 |
| 3000 | 400 |
| 3600 | 450 |
| 4200 | 500 |

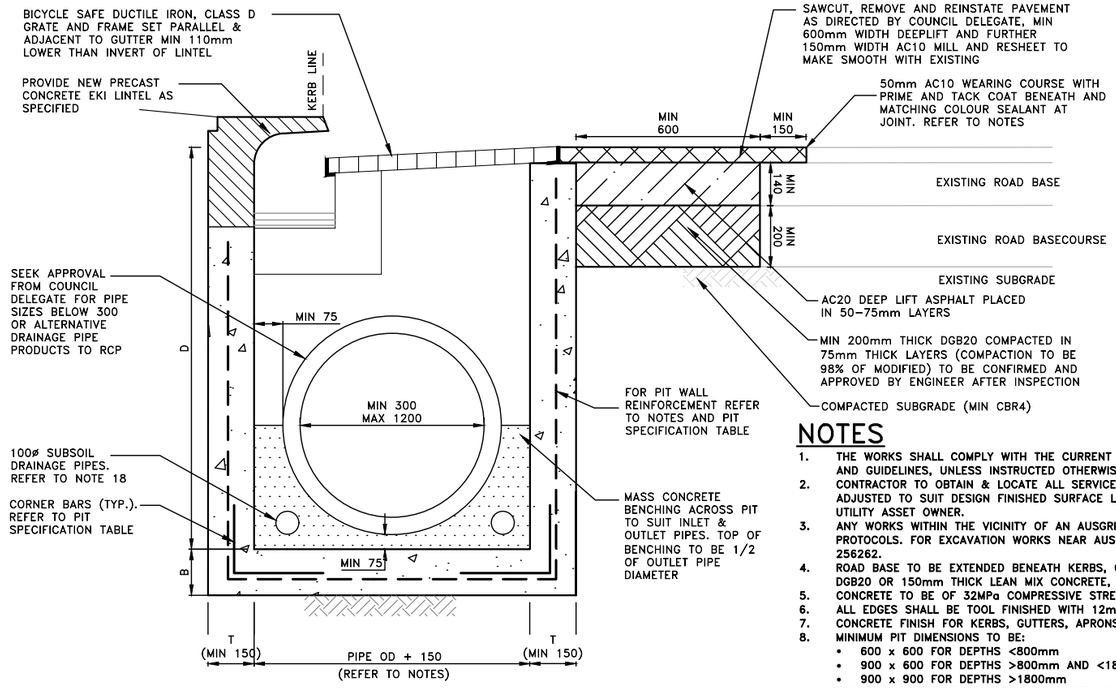


## SECTION B
NOT TO SCALE

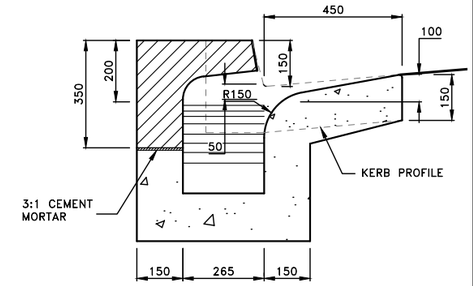


## SECTION C
NOT TO SCALE

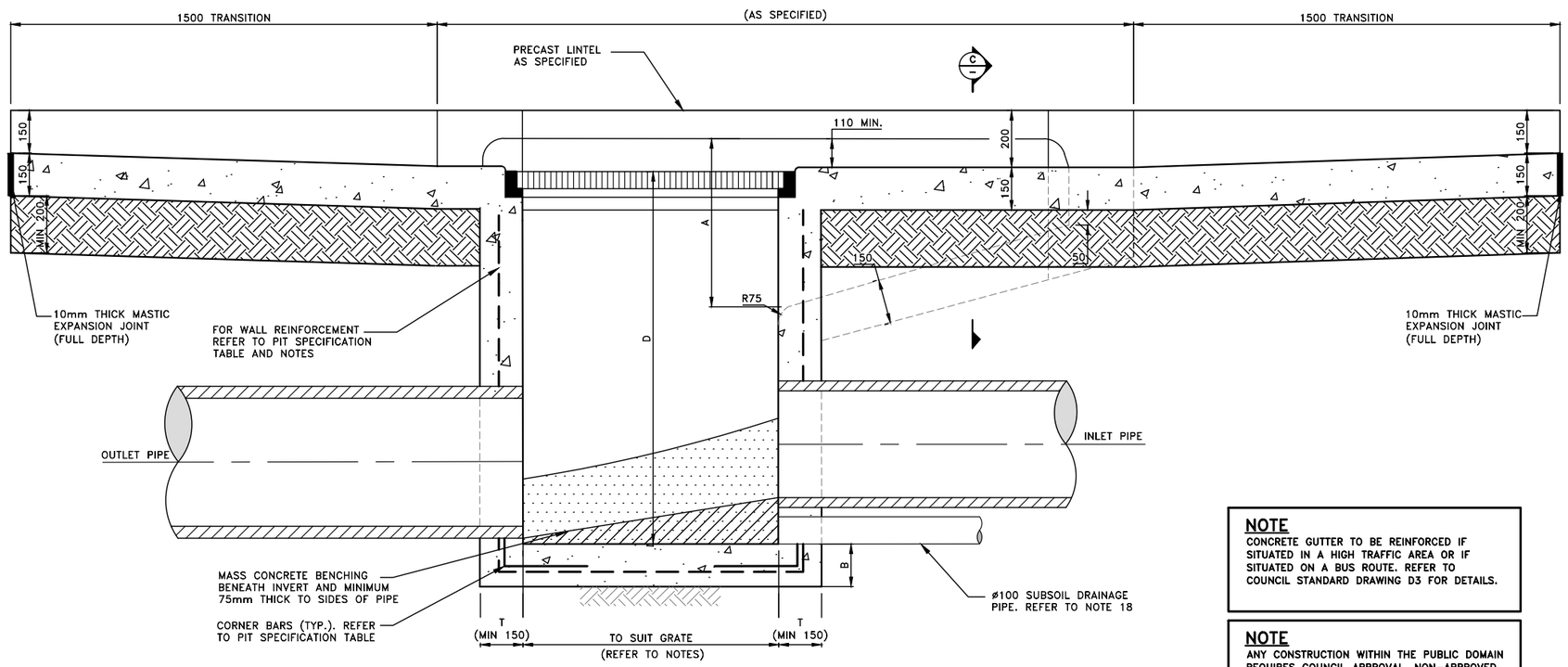


## SECTION A
NOT TO SCALE

**NOTE**
CONCRETE GUTTER TO BE REINFORCED IF SITUATED IN A HIGH TRAFFIC AREA OR IF SITUATED ON A BUS ROUTE. REFER TO COUNCIL STANDARD DRAWING D3 FOR DETAILS.

**NOTE**
ANY CONSTRUCTION WITHIN THE PUBLIC DOMAIN REQUIRES COUNCIL APPROVAL. NON–APPROVED WORKS AND STRUCTURES MAY BE REQUIRED TO BE REMOVED AND THE EXISTING REINSTATED AT THE CONTRACTORS OR DEVELOPERS COST.

## NOTES

1. THE WORKS SHALL COMPLY WITH THE CURRENT AND RELEVANT AUSTRALIAN STANDARDS AND TfNSW TECHNICAL DIRECTIONS AND GUIDELINES, UNLESS INSTRUCTED OTHERWISE BY THE COUNCIL DELEGATE.
2. CONTRACTOR TO OBTAIN & LOCATE ALL SERVICES PRIOR TO WORKS COMMENCING. UTILITY SERVICE COVERS ARE TO BE ADJUSTED TO SUIT DESIGN FINISHED SURFACE LEVELS. UTILITY COVERS TO BE CLASS D OR EQUIVALENT, OR AS SPECIFIED BY UTILITY ASSET OWNER.
3. ANY WORKS WITHIN THE VICINITY OF AN AUSGRID ASSET TO COMPLY TO RELEVANT AUSGRID STANDARDS AND SAFETY PROTOCOLS. FOR EXCAVATION WORKS NEAR AUSGRID POLES, REFER TO THE LATEST REVISION OF AUSGRID STANDARD DRAWING 256262.
4. ROAD BASE TO BE EXTENDED BENEATH KERBS, GUTTERS, APRONS AND DISH CROSSINGS. 150mm THICK RECYCLED COMPACTED DGB20 OR 150mm THICK LEAN MIX CONCRETE, COMPACTED TO 98% S.D.D.
5. CONCRETE TO BE OF 32MPa COMPRESSIVE STRENGTH AT 28 DAYS.
6. ALL EDGES SHALL BE TOOL FINISHED WITH 12mm RADIUS 50mm WIDE EDGING TOOL, UNLESS INDICATED OTHERWISE.
7. CONCRETE FINISH FOR KERBS, GUTTERS, APRONS AND CROSSINGS TO BE STEEL TROWEL.
8. MINIMUM PIT DIMENSIONS TO BE:
   - 600 x 600 FOR DEPTHS <800mm
   - 900 x 600 FOR DEPTHS >800mm AND <1800mm
   - 900 x 900 FOR DEPTHS >1800mm
9. FOR PITS GREATER THAN 900mm IN LENGTH OR 1200mm IN WIDTH SEPARATE DESIGN IS REQUIRED BY A PROFESSIONAL STRUCTURAL ENGINEER.
10. PROVIDE STEP IRONS WHERE PIT IS DEEPER THAN 1.0m AT 300 CENTERS. REFER TO STANDARD DRAWING D8 FOR STEP IRON DETAILS.
11. FOR PIT DEPTHS BETWEEN 1.5m AND 3.0m DEPTH, PROVIDE N12 @ 250C/C EACHWAY AT 40 COVER TO INSIDE FACE WALLS AND BASE. PROVIDE 400 LAP AT CORNERS. FOR PIT DEPTHS GREATER THAN 3.0m, SEPARATE DESIGN IS REQUIRED BY A PROFESSIONAL STRUCTURAL ENGINEER.
12. PROVIDE WELDLOK HOT DIPPED GALVANISED GULLY GRATE GG50D (OR APPROVED EQUIVALENT) SET PARALLEL TO ADJACENT GUTTER AND 10 LOWER FOR RESIDENTIAL ROADS. FOR INDUSTRIAL ROADS USE WELDLOK HEAVY DUTY HOT DIPPED GALVANISED GULLY GRATE GG42D (OR APPROVED EQUIVALENT) INSTALLED AS ABOVE.
13. ALL GRATES TO BE PROVIDED WITH A LOCKING CLIP.
14. ALL GRATES TO BE HOT DIP GALVANISED.
15. DURING INSTALLATION OF THE GRATE AND FRAME, THE CONTRACTOR IS TO ENSURE A MINIMUM CLEARANCE OF 40mm BETWEEN THE LINTEL AND OPENED GRATE.
16. WHERE EXTENDED CHAMBER WIDTH EXCEEDS 1.2m, ROOF REINFORCEMENT TO BE DESIGNED BY A PROFESSIONAL STRUCTURAL ENGINEER.
17. INTERNAL PIT WIDTH SHALL BE INCREASED FOR PIPES AT AN ANGLE.
18. 100mm DIAM. SUBSOIL DRAINAGE PIPE 3m LONG WRAPPED IN GEOFABRIC SOCK TO BE PROVIDED AT INVERT LEVEL EITHER SIDE OF INLET PIPES.
19. IN UNDERTAKING TRENCH EXCAVATION, THE CONTRACTOR SHALL PROVIDE ANY SHORING, SHEET PILING OR OTHER STABILISATION OF THE TRENCH NECESSARY TO COMPLY WITH OH&S REGULATION REQUIREMENTS. THE SIDES ARE NOT TO BE LOADED & SHALL BE KEPT CLEAR OF LOOSE MATERIAL ETC. SAFE ACCESS & EGRESS SHALL BE PROVIDED AT ALL TIMES.
20. THE CONTRACTOR SHALL ENSURE THAT ALL NECESSARY SEDIMENT CONTROL MEASURES ARE PROVIDED IN ACCORDANCE WITH THE REQUIREMENTS OF THE RELEVANT COUNCIL AND AUSTRALIAN STANDARDS AND STATUTORY AUTHORITIES. ALL SEDIMENT & EROSION CONTROLS SHALL BE MAINTAINED THROUGHOUT THE PERIOD OF WORKS, INCLUDING REPAIR AND/OR REPLACEMENT OF DAMAGED SECTIONS. INSPECTIONS ARE TO BE MADE PERIODICALLY AND AFTER STORM EVENTS FOR DAMAGE.
21. PROPERTY STORMWATER OUTLET TO BE 125x75x4 RHS, OR TO SUIT EXISTING, MAINTAINING GRAVITY TO FALL TO K&G. INVERT OF OUTLET TO BE LEVEL WITH INVERT OF GUTTER.
22. LEVELS FOR REINSTATEMENT WORKS TO MATCH EXISTING, UNLESS INSTRUCTED OTHERWISE BY THE COUNCIL DELEGATE.
23. THE CONCRETE IS TO USE TYPE A PORTLAND CEMENT AND IS NOT TO BE ARTIFICIALLY COLOURED, STENCILLED, STAMPED OR PATTERNED.
24. ALL REINFORCEMENT TO BE HOT DIP GALVANISED TO AS4671 WITH MINIMUM 50 COVER.
25. RE–SHEET MINIMUM 600mm WIDTH OF DEEP LIFT PAVEMENT AND A FURTHER 150mm WIDTH OF AC10 WEARING COARSE ADJACENT NEW KERB, GUTTER, DISH CROSSINGS OR LAYBACKS. REFER TO STANDARD DETAIL R6 FOR FURTHER DETAIL.
26. COUNCIL'S DELEGATE TO INSPECT FOR ALL UNSOUND AREAS BEFORE PROFILING AC PAVEMENT AND AFTER PROOF ROLLING. WEAK SECTIONS ARE TO BE IDENTIFIED AND HEAVY–PATCHED TO A NOMINAL THICKNESS OF 150mm WITH AC28 BEFORE RESEALING IN ACCORDANCE TO TYPICAL CROSS–SECTION.
27. UNLESS SPECIFIED, OVERLAY TO CONSIST OF 50mm THICK AC10.
28. UNLESS SPECIFIED, CRACK SEALANT FOR FLEXIBLE PAVEMENT TO BE BITULASTIC BITUFLEX OR APPROVED EQUIVALENT.
29. UNLESS SPECIFIED, CRACK SEALANT FOR RIGID PAVEMENT TO BE "DOW CORNING 888" OR APPROVED EQUIVALENT.
30. INSPECTIONS ARE REQUIRED AT THE FOLLOWING STAGES AND AS OTHERWISE DIRECTED BY THE COUNCIL DELEGATE. DO NOT CONTINUE UNTIL APPROVAL RECEIVED FROM COUNCIL DELEGATE.

**ROAD PAVEMENT**
- A) SUBGRADE TRIMMED AND CONSOLIDATED PRIOR TO FIRST PAVEMENT COURSE. (NOTE: SINGLE AXLE TRUCK WITH 8t LOAD TO BE AVAILABLE FOR PAVEMENT TEST).
- B) EACH PAVEMENT LAYER SPREAD AND COMPACTED. (NOTE: SINGLE AXLE TRUCK WITH 8t LOAD TO BE AVAILABLE FOR PAVEMENT TEST).
- C) PAVEMENT COMPLETED PRIOR TO SEALING.

**CONCRETE WORKS**
- A) SUBGRADE TRIMMED AND CONSOLIDATED.
- B) EXCAVATION COMPLETED, FORMWORK AND REINFORCEMENT SET.
- C) CONCRETE FORMED AND CURED.

31. MATCH NEW PAVEMENT NEATLY AND FLUSH WITH EXISTING.
32. CONTRACTOR TO SUPPLY AND LAY TURF TO AREA AFFECTED BY PROPOSED WORKS OR AS DIRECTED BY THE COUNCIL DELEGATE.
    - THE SPECIES OF TURF TO BE "SOFT LEAF SHADEMASTER BUFFALO" UNLESS DIRECTED OTHERWISE
    - THE TURF SHOULD BE PLACED ON A MINIMUM 100mm DEEP LAYER OF IMPORTED TURF UNDERLAY TOPSOIL
    - SUBSOIL SHOULD BE CULTIVATED TO A MINIMUM DEPTH OF 100mm
    - IRRIGATE THE TURF TWICE A WEEK FOR 12 WEEKS
33. FOR TURFING NOTES REFER TO WAVERLEY COUNCIL STANDARD DRAWING R18.
34. ANY DISRUPTION TO EXISTING NATURE STRIPS OR PLANTED BEDS WITHIN COUNCIL LAND TO BE REINSTATED AS PER EXISTING. SEEK APPROVAL FROM COUNCIL DELEGATE FOR CHANGES TO PLANT SPECIES. EDGING OR PAVING TO NATURE STRIPS REQUIRES APPROVAL FROM THE COUNCIL DELEGATE.
35. ALL DIMENSIONS ARE IN MILLIMETERS UNLESS OTHERWISE SHOWN.

| ISSUE | ISSUE DESCRIPTION | DATE | DRN | DES | VER | ISSUE | ISSUE DESCRIPTION | DATE | DRN | DES | VER |
|---|---|---|---|---|---|---|---|---|---|---|---|
| A | ORIGINAL ISSUE | 10/03/26 | AM | AM | NZ | | | | | | |

BEFORE YOU DIG www.byda.com.au

SURVEYED BY: N/A
DATE: N/A
COORDINATION: N/A
DATUM: N/A


WAVERLEY COUNCIL
CIVIL DESIGN, MAJOR PROJECTS
Level 1, 87-99 Oxford Street, Bondi Junction, NSW, 2022
PO Box 9, Bondi Junction NSW 1355
Tel. (02) 9083 8000
Email: info@waverley.nsw.gov.au
Web: www.waverley.nsw.gov.au


APPROVED:
DATE SIGNED:
SCALE AS SHOWN @ A3:
PLAN: HORIZ: - VERT: -
LONG-SECTION HORIZ: - VERT: - CROSS-SECTION HORIZ: - VERT: -

Project Name: STANDARD DRAWING - DRAINAGE - D1
PROJ No: WC STD DRW
TRIM No: -
Drawing Title: STANDARD GRATED KERB INLET - ON-GRADE
Drawing No: D1
Issue: A